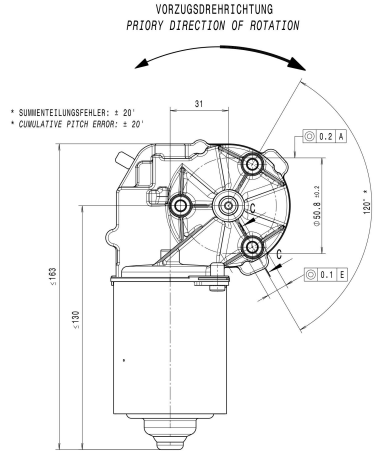

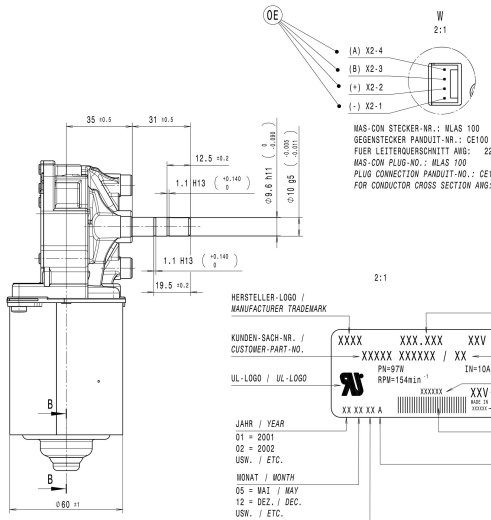

MAS-CON STECKER-NR.: MLAS 100
GEGENSTECKER PANDUIT-NR.: CE100 F22-04
FUER LEITERQUERSCHNITT AWG: 22
MAS-CON PLUG-NO.: MLAS 100
PLUG CONNECTION PANDUIT-NO.: CE100 F22-04
FOR CONDUCTOR CROSS SECTION AWG: 22

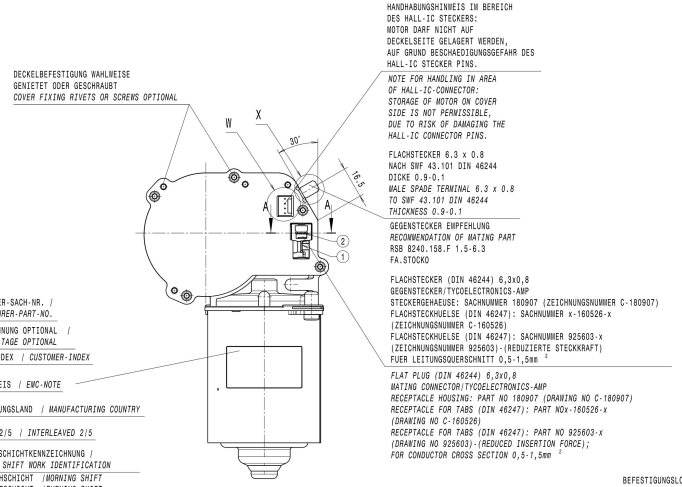

HANDHABUNGSHINWEIS IM BEREICH DES HALL-IC STECKERS:
MOTOR DARF NICHT AUF DECKELSEITE GELAGERT WERDEN, AUF GRUND BESCHAEDIGUNGSGEFAHR DES HALL-IC STECKER PINS.

NOTE FOR HANDLING IN AREA OF HALL-IC-CONNECTOR: STORAGE OF MOTOR ON COVER SIDE IS NOT PERMISSIBLE, DUE TO RISK OF DAMAGING THE HALL-IC CONNECTOR PINS.

FLACHSTECKER 6.3 x 0.8
NACH SNF 43.101 DIN 46244
DICKE 0.9-0.1
MALE SPADE TERMINAL 6.3 x 0.8 TO SNF 43.101 DIN 46244 THICKNESS 0.9-0.1

GEGENSTECKER EMPFEHLUNG
RECOMMENDATION OF MATING PART
RSB 8240.158.F 1.5-6.3
FA.STOCKO

FLACHSTECKER (DIN 46244) 6,3x0,8
GEGENSTECKER/TYCOELECTRONICS-AMP
STECKERGEHAEUSE: SACHNUMMER 180907 (ZEICHNUNGSNUMMER C-180907)
FLACHSTECKHUELSE (DIN 46247): SACHNUMMER x-160526-x
(ZEICHNUNGSNUMMER C-160526)
FLACHSTECKHUELSE (DIN 46247): SACHNUMMER 925603-x
(ZEICHNUNGSNUMMER 925603)-(REDUZIERTE STECKKRAFT)
FUER LEITUNGSQUERSCHNITT 0,5-1,5mm ²

FLAT PLUG (DIN 46244) 6,3x0,8
MATING CONNECTOR/TYCOELECTRONICS-AMP
RECEPTACLE HOUSING: PART NO 180907 (DRAWING NO C-180907)
RECEPTACLE FOR TABS (DIN 46247): PART NOx-160526-x
(DRAWING NO C-160526)
RECEPTACLE FOR TABS (DIN 46247): PART NO 925603-x
(DRAWING NO 925603)-(REDUCED INSERTION FORCE);
FOR CONDUCTOR CROSS SECTION 0,5-1,5mm ²

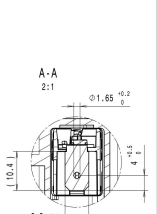

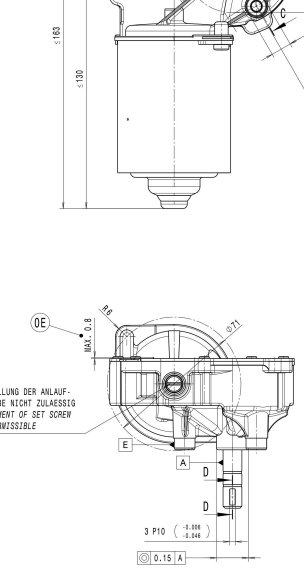

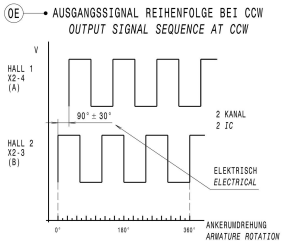

FLACHSTECKERENDE AM GERAET
AEHNLICH SNF 43.101 DIN 46244
MALE SPADE TERMINAL
SIMILAR SNF 43.101 DIN 46244

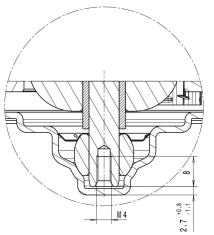

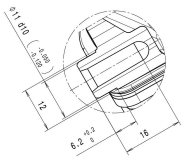

C-C (3x)
2:1

BEFESTIGUNGSLOECHER FUER SELBSTFORMENDE SCHRAUBEN M6, POWER LOK GEWINDE DIN ISO 965-2, MAX. ZULAESSIGES ANZUGSMOMENT DER BEFESTIGUNGSSCHRAUBE 13Nm
FASTENING HOLES FOR SELF-FORMING SCREWS M6, POWER LOK THREAD DIN ISO 965-2, MAX. PERMISSIBLE TORQUE FOR FASTENING SCREW 13 Nm

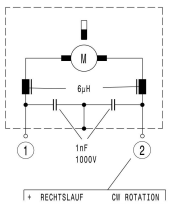

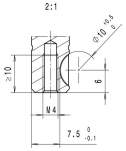

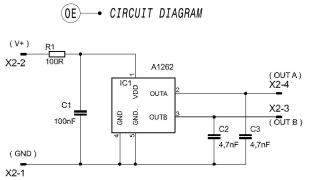

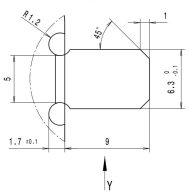

DATEN HALL IC -2 KANAL
DATA OF HALL IC -2 SIGNAL CHANNEL

SPANNUNGSBEREICH: Up = 4.5-24V
VOLTAGE RANGE
STROMAUFNAHME: ≤ 30 mA
CURRENT CONSUMPTION
TEMPERATURBEREICH: = -20 °C - +60°C
TEMPERATURE RANGE

AUSGANG: = 3 IMPULSE PRO UMDREHUNG DER ANKERWELLE
OUTPUT: = 3 PULSE PER REVOLUTION OF ARMATURE

AUSGANGSSIGNAL
OUTPUT SIGNAL

AUSGANG: = OFFENER KOLLEKTOR
OUTPUT = OPEN COLLECTOR

SAETTIGUNGSSPANNUNG: UCESAT ≤ 0.4V = ULOW
SATURATION VOLTAGE: UCESAT ≤ 0.4V = ULOW

NIEDERVOLT-AUSGANGSSPANNUNG BEI = 26mA
LOW LEVEL OUTPUT VOLTAGE AT Ia = 26mA

TASTVERHAELTNIS DER AUSGANGSSIGNALE : 50% ± 25%
PULS DUTY FACTOR OF OUT-PUT SIGNAL

RISE AND FALL TIME >=25mV/ µs BEI KUNDENAUSSENBESCHALTUNG
RISE AND FALL TIME >=25mV/ µs AT CUSTOMER OUTSIDE PROTECTIVE CIRCUIT

EINSCHALTVERZOEGERUNG: 150ms BEI 3.8V
ON TIME DELAY: 150 ms AT 3.8V

SCHALTFOLGE: BEI CCW HALL 2 PIN 4 GEFOLGT VON HALL 1 PIN 3
SWITCHING SEQUENCE: ON CCW HALL 2 PIN 4 FOLLOWED BY HALL 1 PIN 3

KOHLEQUALITAET 09
BRUSH QUALITY 09

** ○ MESSPUNKTE KENNLINIE
** ○ *MEASURE POINTS GRAPH*

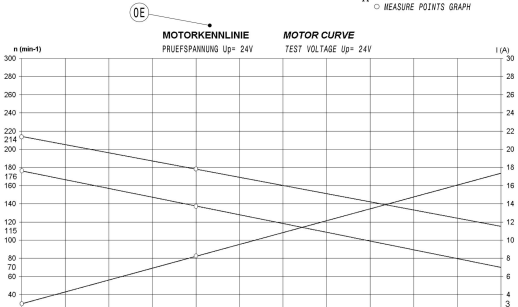

A) GENERAL

1. NOMINAL VOLTAGE
2. NO LOAD SPEED
3. NO LOAD CURRENT
4. STALL CURRENT
5. STARTING TORQUE
6. RFI SUPPRESSION
7. THERMAL SWITCH
8. ISOLATION TEST
9. SELF LOCKING STATIC
10. RADIAL LOAD ON DRIVE SHAFT
11. AXIAL LOAD ON DRIVE SHAFT
12. NOISE LEVEL
13. AMBIENT TEMPERATURE
14. ENCLOSURE CLASS
15. VIBRATION

B) RUNNING DATA

OPERATING TORQUE (NOM. LOAD)
CURRENT LIMIT

C) LIFE TEST

1. CYCLE (DEFINITION)
2. TEST VOLTAGE
3. TEST TORQUE
4. TEST TEMPERATURE
5. EXTERNAL COOLING
6. MIN. LIFE TIME
7. PERFORMANCE AFTER LIVE TEST

D) OTHER VALID DOCUMENTS

1. GEN. SPECIFICATION INDUSTR.- MOTORS NIDEC
ACC. SWF 46.402 (EDITION AT 09.04.1998)
ADDITIONAL REQUIREMENTS, WHICH ARE NOT CONTENT OF THE ABOVE SPECIFICATION, HAVE TO BE SECURED BY THE CUSTOMER.
FOR THIS ADDITIONAL REQUIREMENTS NIDEC CAN TAKE NO PRODUCT LIABILITY.

A) ALLGEMEINES

1. NENNSPANNUNG	UP = 24 V DC
2. LEERLAUFDREHZAHL	n0 = 176-214MIN-1
3. LEERLAUFSTROM	I0 ≤ 3 A
4. BLOCKIERSTROM	Ik > 26 A
5. BLOCKIERMOMENT	MA ≥ 15 Nm
6. ENTSTOERBAUTEILE	= SIEHE DIAGRAMM / SEE DIAGRAM
7. THERMOSCHALTER	= NA
8. ISOLATIONSPRUEFUNG	= 850V DC FUER 1 SEC. / FOR 1 SEC.
9. GETRIEBEHEMMUNG STATISCH	= NA
10. RADIALBELASTUNG DER ABTRIEBSWELLE	F = 80 N IN 25MM ABSTAND VOM GETRIEBEGEHAEUSE /DISTANCE OF GEARHOUSING
11. AXIALBELASTUNG DER ABTRIEBSWELLE	F = 15 N
12. GERAEUSCHPEGEL	= NA
13. UMGEBUNGSTEMPERATUR	= -30°BIS +60°C
14. SCHUTZART	IP = 30
15. VIBRATION	= NA

B) BETRIEBSDATEN

NENNMOMENT (NENNLAST)	MN = 4 Nm CW+CCW
STROMBEGRENZUNG	= NA

C) LEBENSDAUERPRUEFUNG

1. ZYKLUS (DEFINITION)	= AUF (CW) 20SEC. - PAUSE 40SEC./ ON (CW) 20SEC. - BREAK 40SEC. ZU (CCW) 20SEC. - PAUSE 40SEC./ OFF (CCW) 20SEC. - BREAK 40SEC.
2. PRUEFSPANNUNG	= 24 V DC
3. PRUEFMOMENT	= 4 Nm MIT RADIALLAST /WITH RADIAL LOAD
4. PRUEFTEMPERATUR	= RT
5. FREMDKUEHLUNG	= ZUR VERKUERZUNG DER PAUSEN ZULAESSIG /BY REDUCTION THE BREAKS PERMISSIBLE
6. MIN. LEBENSDAUER	= 30 000 ZYKLEN / 30 000 CYCLES
7. LEISTUNG NACH LEBENSDAUERTEST	= ABWEICHUNG BIS 10% ZULAESSIG/ DIFFERENCE TILL 10% PERMISSIBLE

D) MITGELTENDE UNTERLAGEN

1. ALLG. SPEZIFIKATION INDUSTRIEMOTOREN NIDEC
NACH SNF 46.402 (AUSGABE VOM 09.04.1998)
DARUEBERHINAUS GEHENDE ANFORDERUNGEN
HAT DER KUNDE DURCH PRUEFUNGEN IM SYSTEM SICHERZUSTELLEN.
HIERFUER UEBERNIMMT NIDEC KEINE HAFTUNG.

VERZAHNUNGSDATEN / *GEAR TOOTH DATA*

UEBERSETZUNG	*RATIO*	i	=	1:26.5
GANGZAHL	*NO. OF STARTS*	z1	=	2
ZAEHNEZAHL	*NO. OF TEETH*	z2	=	53
NORMALMODUL	*NORMAL MODULE*	mn	=	1
ZAHNRADMATERIAL	*GEAR WHEEL MATERIAL*		=	DELRIN 100

MAX. GETRIEBEFESTIGKEIT STATISCH : 24Nm
MAX. STATIC GEAR STRENGTH

WERKSTOFF MOTORTOPFLAGER : SINTERBRONZE
MATERIAL OF MOTOR HOUSING BEARING : BRONZE

** 100% PRUEFUNG KONTROLLPLAN
** 100% *CHECKING CONTROL PLAN*

NA NICHT ANGEWENDET
NOT APPLICABLE

SYSTEM CHANGE:
10000011264 REPLACED BY M0061808_A00

SAMPLING AND RELEASE ACCORDING TO HQ-G-C2-04 AND NMA SUPPLIER MANUAL

SURFACE TEXTURE ACC. TO DIN EN ISO 1302		EDGES ACC. TO ISO 13715			
GEOMETRICAL PRODUCT SPECIFICATIONS (GPS) SIZE ISO 14405 (E)		GEO. TOLERANCING ACC. TO DIN EN ISO 1101			
LIMIT DIMENSIONS FOR NOMINAL SIZE RANGES IN mm	...6	>6...30	>30...120	>120...400	>400...1000
TOLERANCES FOR NOMINAL SIZE RANGES IN mm	± 0.1	0.2	0.3	0.5	0.8
LIMIT DIM. FOR NOMINAL SIZE RANGES IN mm (SHORTER ANGLE SIDE)		...10	>10...50	>50...100	>100
TOLERANCES FOR NOMINAL SIZE RANGES	±	1°	30'	20'	10'

REV.	NO.	ZONE	DATE	NEW	CLD
00				INTRODUCTION FOR NMA, NIDEC MINDEN	
	101			ELEMENTS ADDED/ CHANGED	
		A17		ZONE B1: (16) D2-E4 (17) D2-E4 (18) D2-E4 (19) D2-E4	IND: D ZC: D FC: D FI: D
				ZONE B2: (1) E2-F1	IND: D ZC: D FC: D FI: D
	139			ADD: D.E.	ADD: D
	420			OUTPUT SIGNAL REGARDING AT DEN NIDEC	
	230			MOTOR CURVE FOR "PRELIMINARY" DELETED	

CD	CONTROL DIMENSION (CDI)	0	NO.	DRAWING NO.	PART NAME / NOTE / QTY. / DIN / REMARKS
	SPECIAL PRODUCTS AND PROCESS CHARACTERISTICS				HOLD-HOLDER FORM / REQUIRED STANDARD / APPL.CABLE FORM / NIDEC SPEC.
	Safety/Regulation Characteristics (SPC)	0		MATERIAL	
	Significant Characteristics (SC)	0		TOLERANCE	
	Functional Characteristics (FC)	0		SURFACE TREATMENT	
	Process Characteristics (PC)	0		SURFACE FINISH	
				GENERAL TOLERANCE ACC. TO:	

NIDEC has proprietary rights in the material disclosed herein. This drawing and/or technical information is issued in confidence for engineering information only and may not be used to manufacture anything shown or referred to herein without direct permission from NIDEC in the user. This drawing and/or technical information is loaned for mutual assistance and is subject to recall by NIDEC at any time.
THIS DRAWING AND/OR TECHNICAL INFORMATION IS THE PROPERTY OF NIDEC.

DRAWING STATUS	RELEASED DATE	DESIGN MODE			
NMBS PRODUCTION	2022-06-22	NMAG	CATIA V5	MATERIAL NO.	NA 405-666-99-99
E.C.O. NO.	DCN0022844	APPROVED	TFOMENT	2022-10-08	
APPROVED	CLEARANCE	CHECKED	TFOMENT	2022-10-08	WPF/CLE NO.
	2022-06-09	DESIGNED	TFOMENT	2019-10-07	0266
SECURITY	NATIONAL	DRAWN	TFOMENT	2022-10-08	TITLE MOTOR 80K31

PROJECTION METHOD: THIRD ANGLE PROJECTION / FIRST ANGLE PROJECTION

Nidec —All for dreams

MODEL NO.				REVISION NO.
DRAWING NO.	M0061808_A00			0 0E
MASS	UNIT	SCALE	PAGE	SIZE
TBD	mm	1 : 1	1 OF 1	A0